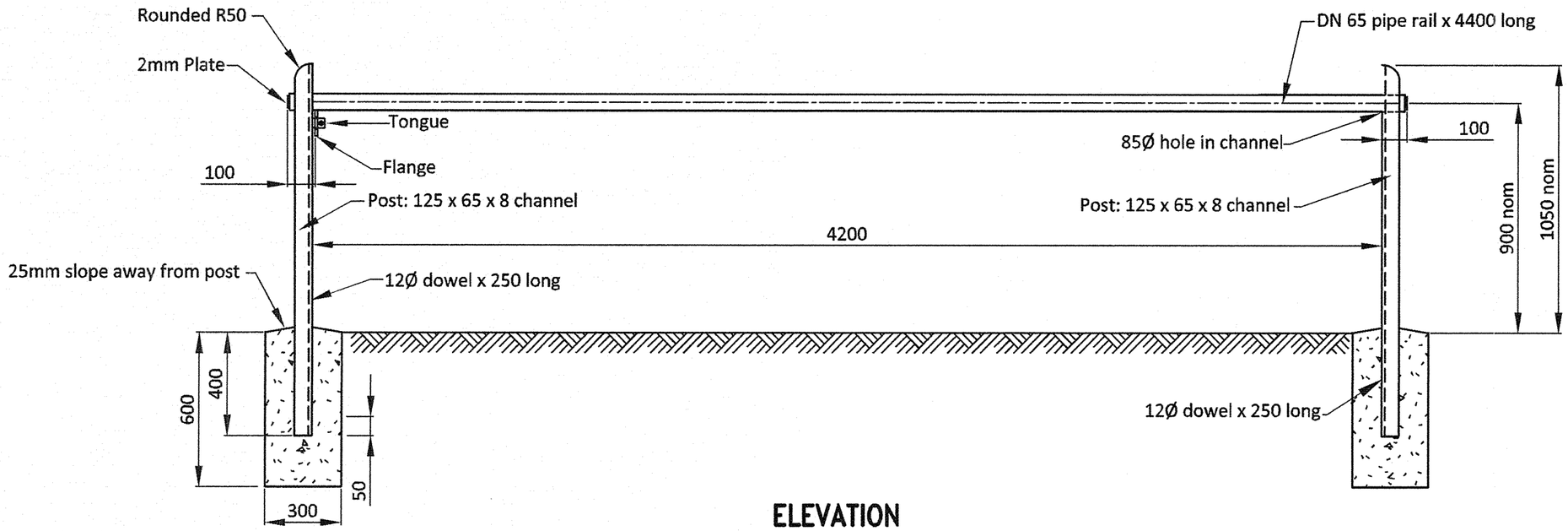

ELEVATION
Scale: 1:20

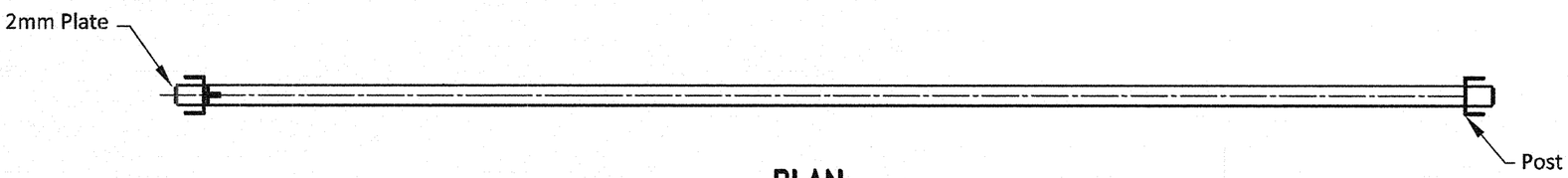

PLAN
Scale: 1:20

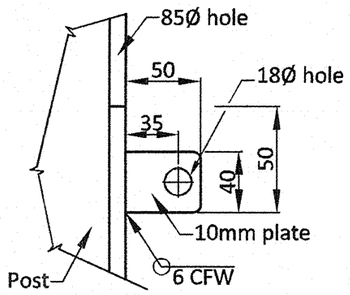

LOCK DETAIL: TONGUE
Scale: 1:4

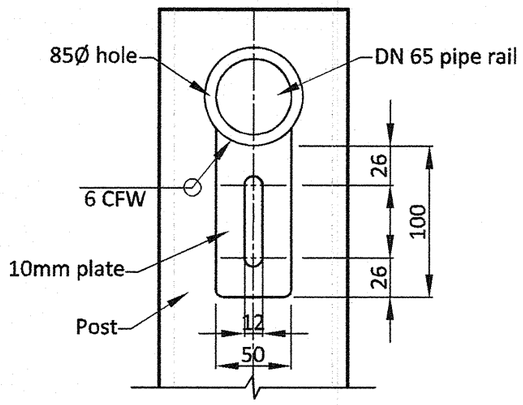

LOCK DETAIL: FLANGE
Scale: 1:4

NOTES

1. All pipes medium black tube to AS 1074.
2. All welds to AS 1554.
3. All welding symbols to AS 1101.3.
4. Type 1 - 6mm plate key to fit through slotted hole in pipe and accept padlock. Padlock to be keyed to Council's requirements.
5. Steel plates, Grade 250 to AS 3678.
6. Dowel, Grade 250 to AS 3679.
7. Channels, Grade 250 to AS 3679.
8. All fabricated work, including plate key, shall have smooth ground edges.
9. All steelwork to be hot dip galvanised after fabrication to AS 4680.
10. Concrete N20 in accordance with AS 1379 and AS 3600.
11. CCA log barriers to be 150mm diameter, Grade A superlogs or equivalent, treated to AS 1604.
12. Paint all cut CCA surfaces with CUPRINOL or equivalent.
13. Gate must have an unobstructed opening width of 4200mm.

REVISIONS

	AMENDMENT	INITIALS	DATE		AMENDMENT	INITIALS	DATE
F				L			
E				K			
D				J			
C				I			
B				H			
A	ORIGINAL ISSUE			G			

City of Ipswich
IPSWICH CITY COUNCIL
45 Roderick St
P.O. Box 191
Ipswich QLD 4305
Australia
Tel (07) 3810 7894
Tel (07) 3810 7927
Fax (07) 3810 7950

APPROVED
CHIEF OPERATING OFFICER (WPR)
DATE 29-7-13

STANDARD DRAWING

FENCE – METAL LOCKABLE SLIDE RAIL
OPTION A: PARKS/RESERVES

PARKS

SP.85

REV: A | DRAWER: 100